Globe Valve

Angle Type, Flanged Ends

F-7302/F-7352
JIS 5K

Description: Angle type, bronze body, metal seated screw down stop valve with rising stem, secured bonnet, flat faced flanged

Application: Start/stop and throttling of; sea water, water, and oils, etc

Standard & Design:

Design Code:	JIS F7302
Inspection Standard:	JIS F7400
Flange Standard:	JIS B2240
Face To Face Standard:	JIS F7427 (F7302)
Flanges Drilled:	JIS 5K (DN15-DN65)
Pressure Rating:	JIS 5K (DN15-DN65)

Variations: F-7302=Fixed Disc
F-7352=SDNR

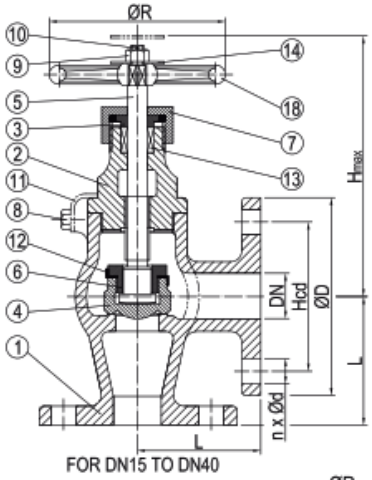

FOR DN15 TO DN40

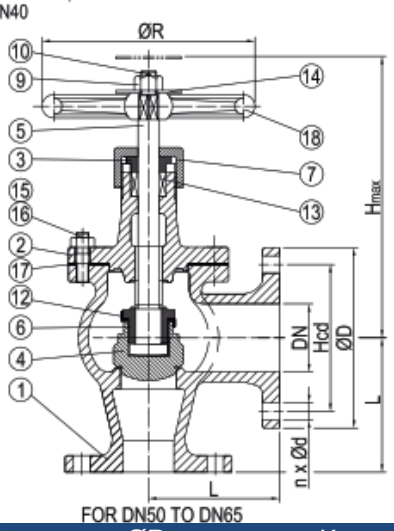

FOR DN50 TO DN65

Material:

No	Part		Material	Code
1	Body		Bronze	BC6
2	Bonnet	(<=DN40)	Brass	C 3771 BE
2	Bonnet	(>=DN50)	Bronze	BC6
3	Gland		Brass	C 3771 BE
4	Disc	(<=DN40)	Brass	C 3771 BE
4	Disc	(>=DN50)	Bronze	BC6
5	Stem		Brass	C 3771 BE
6	Disc Nut		Brass	C 3771 BE
7	Gland Nut		Brass	C 3771 BE
8	Machine Screw		Stainless Steel	SUS 304
9	Hexagonal Nut		Stainless Steel	SUS 304
10	Split Pin		Brass	C 2600 W
11	Locking Plate		Brass	C 2600 P
12	Disc Lock Washer		Brass	C 2600 P
13	Packing		Graphite	-
14	Nameplate		Aluminium	Al
15	Stud		Brass	C 3771 BE
16	Hexagonal Nut		Brass	C 3771 BE
17	Gasket		Asbestos Free	-
18	Handwheel		Cast Iron	FC200

DN	n x Ød	Hcd	ØD	L	H (max)	ØR	Kg
15	4x12	60	80	55	120	80	2.0
20	4x12	65	85	60	130	100	2.7
25	4x12	75	95	65	145	125	3.4
32	4x15	90	115	80	150	125	4.8
40	4x15	95	120	85	165	140	6.0
50	4x15	105	130	100	200	140	10.1
65	4x15	130	155	115	220	160	15.6

All measurements in mm. Weights are approximations

LK Valves & Controls Limited, Unit 4 Arbour Place, Arbour Lane, Knowsley Industrial Park, Liverpool L33 7XG
T: 0151 548 3300 F: 0151 548 3311 sales@lkvalvesandcontrols.co.uk www.lkvalvesandcontrols.co.uk